

CLEMENS

BEVERAGE TECHNOLOGY

CLEMENS BEVERAGE TECHNOLOGY

50 YEARS OF EXPERIENCE AND CREATIVITY

HOW IT ALL STARTED

The company‘s roots date back to the summer of 1952, when three brothers, Bernard, Nikolaus and Matthias Clemens, launched a locksmith and hardware store. Guided by the principle of acting with courage and caution, Bernard Clemens expanded the business area from 1970 onwards to include manual cellar appliances with his own patents. In 1975, the partnership with GAI in Italy marked the company‘s entry into bottling technology, which was further enhanced in 1977 with the addition of labelling technology from ENOS in Italy. Over the following years, CLEMENS Technology continued to expand its expertise in cellar technology.



The portfolio has gradually been expanded to include tanks from LETINA in Croatia, labeling and capsuling technology from GAI, micro-filtration systems, machines for champagne production from TDD in France, capping systems for champagne and wine from ROBINO & GALANDRINO in Italy, as well as depalletizing, bottle transport, packing and palletizing systems from MAS PACK in Italy. Our long-term collaboration with forward-thinking partners enables us to tailor our solutions to our customers' specific needs, offer cutting-edge technology and provide efficient, high-quality service. To further improve this service, the Beverage technology department took up residence in its own company building in 2017. This new facility offers a large assembly hall and an extensive spare parts warehouse. Since 2021, we are operating as an independent company, CLEMENS Getränketechnik GmbH & Co. KG.

The machines and systems are all manufactured by family-run businesses that take the quality of their products very close to their hearts. The machines are available as complete production lines as well as modular solutions. Software development and system programming are carried out in-house, which means that specific customer requirements can also be taken into account.

CLEMENS PARTNERS

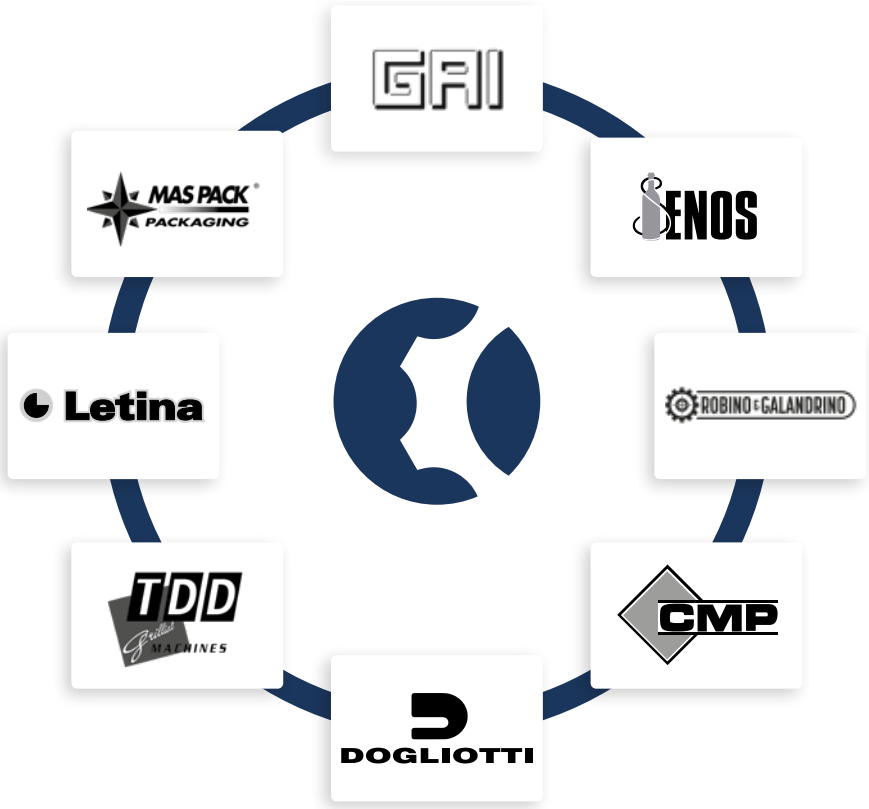



„Good solutions start with a clear vision“.

Clemens Getränketechnik

OUR COMMITMENT

50 YEARS OF EXPERIENCE IN SOLUTIONS FOR THE DRINKS INDUSTRY

CREATIVE DYNAMICS

CONCEPTION & IMPLEMENTATION

Are you looking to implement a new customized filling, labeling or packaging line? Do you seek to highlight the quality of your product? We are offering comprehensive customer-oriented advice on efficient planning of an entire line or optimized positioning of individual machines. Our 50 years of experience in automation solutions are for a variety of beverages, including wine, sparking wine, spirits, liqueurs, fruit juice, water, oil, alcopops, beer and dealcoholized products.

CUSTOMIZED PLANTS + SERVICE

For CLEMENS, offering a system involves first understanding the customer‘s needs and then displaying the potential technical solutions that could meet those needs. It is not primarily about supplying machines; rather, it is about developing a technical solution that adds value for the customer. At CLEMENS, we assemble individual elements to create a comprehensive solution. We act on behalf of our customers as a partner and have had the privilege of accompanying many of them in their development and assisting them in their growth over the years.
We advise on the purchase of space- and energy-efficient filling and packaging lines and plan customized systems according to your requirements. Our trained technicians install the complete lines or individual machines on site and are also available to you with their extensive expertise for subsequent maintenance or repairs. CLEMENS customers benefit from an efficient on-site service that enables high machine utilization times.

CREATIVE CONCEPTION

SMART SOLUTIONS TO INDIVIDUAL REQUIREMENTS

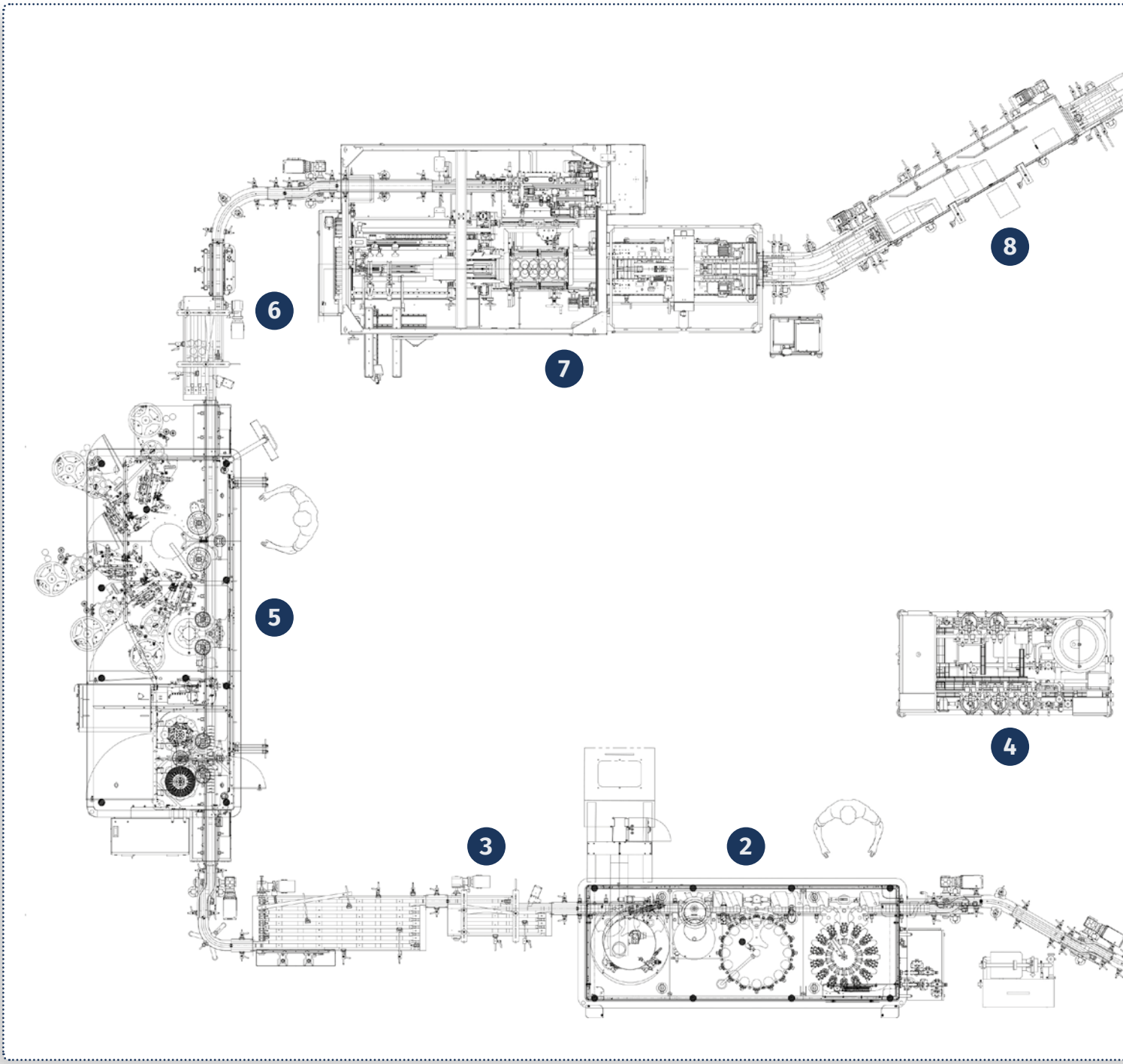

CLEMENS
BEVERAGE TECHNOLOGY

SPACE-SAVING - ECONOMICAL - SUSTAINABLE

Filling Line - Output: 3,000 bph
Still wine: 3,000 lph
Space requirements (LxW): 21 x 12 meters

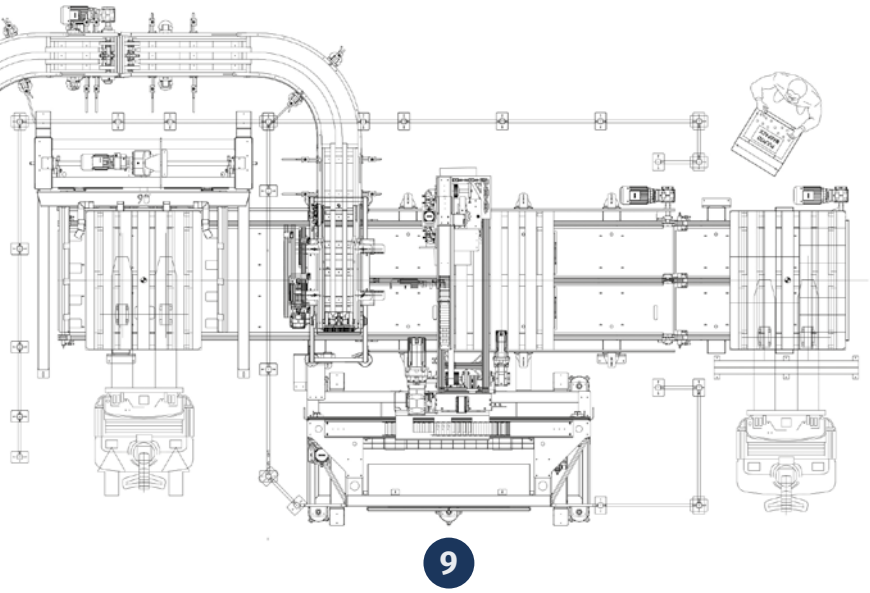

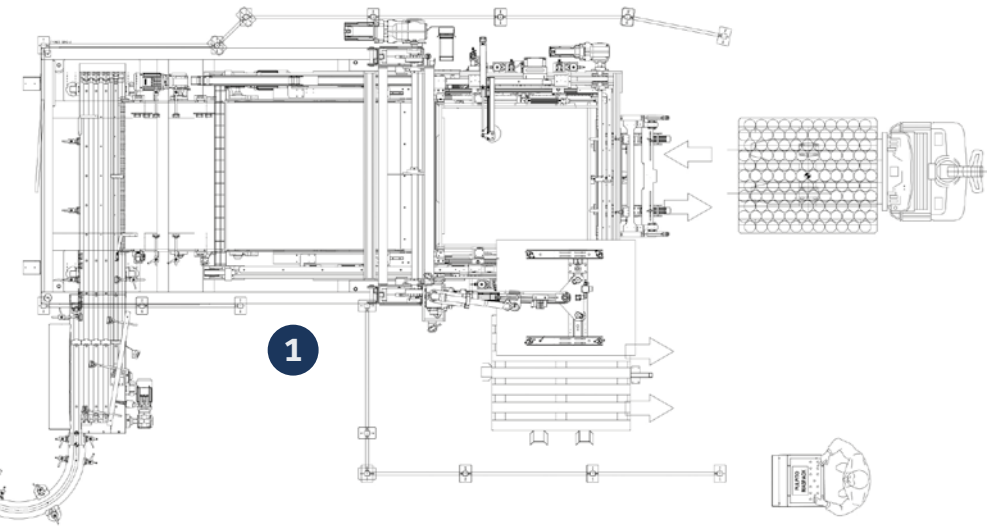

1. MAS PACK TATO SWEEP 23 - COMPACT Depalletizer

2. GAI 3006-3V1-YT Monoblock with rinser, filler, capper

3. INDSPECT ECO filling level and cap control

4. CIP- and microfiltration

5. GAI 9540B/6E Monoblock with bottle washer and dryer, caps distributor, labeler

6. INDSPECT ECO Label control

7. MAS PACK JOLLYPACK 23-1-HM Carton erector, bottle packer and carton closer

8. MAS PACK Conveyors for carton labeler

9. MAS PACK MINIPAL 22-C Palletizer

CREATIVE CONCEPTION

SMART SOLUTIONS TO INDIVIDUAL REQUIREMENTS

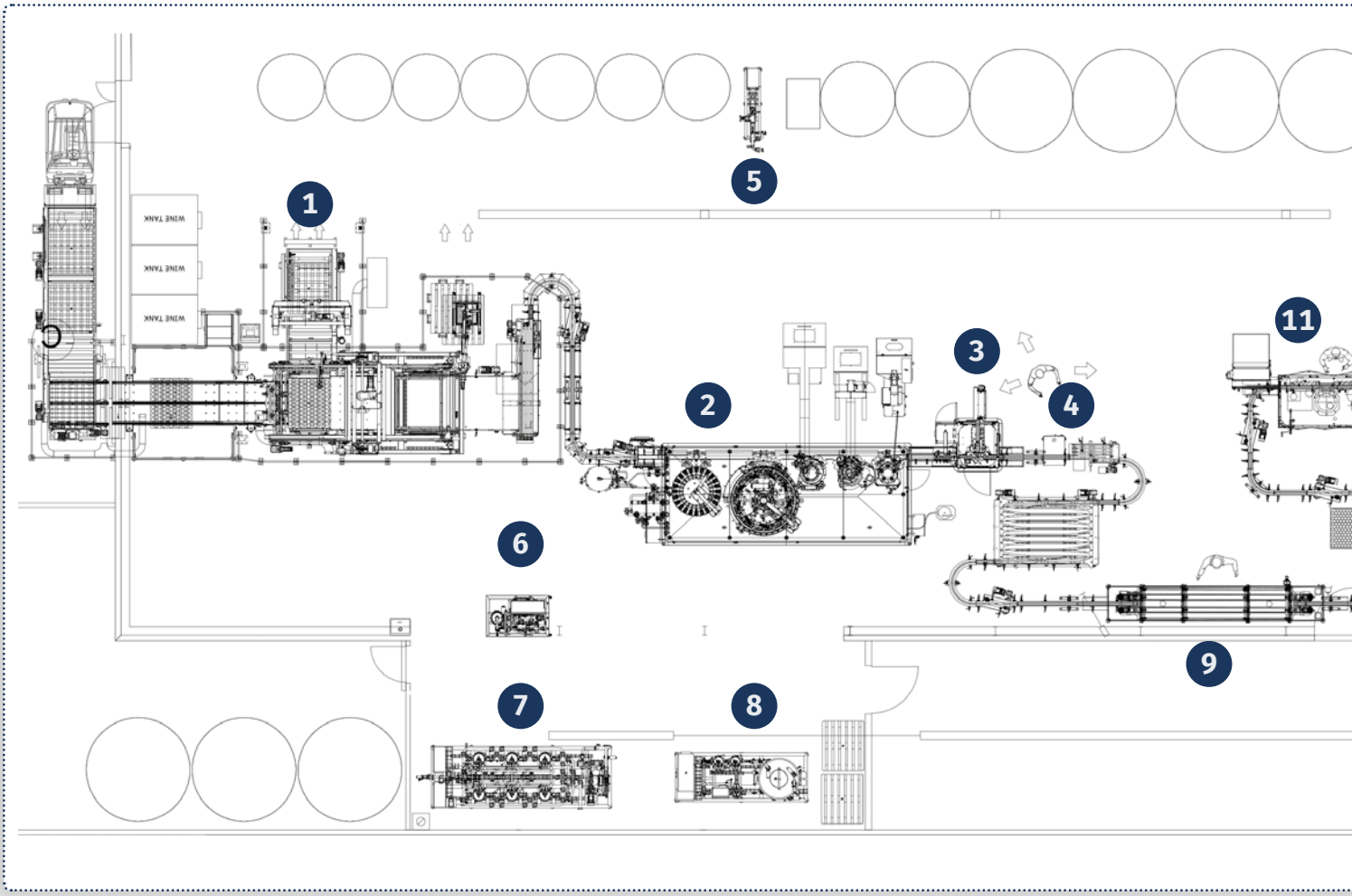

1. MAS PACK TATO SWEEP 22 Depalletizer
2. GAI 7033 RES HP Monoblock with rinser, filler, screw capper, crown capper, corker
3. GAI 44001 Wiring machine
4. INDSPECT PRO Filling level, caps and wire hood controller
5. WIN&TECH Product pump
6. KIESELMANN CO2 membrane
7. WIN&GUARD Microfiltration, heath exchange
8. WIN&GUARD CIP-plant
9. MAS PACK OMEGA Conveyor system
10. CAMES WDT-8 Bottle washer and drying tunnel

CLEMENS
BEVERAGE TECHNOLOGY

SPACE-SAVING - ECONOMICAL - SUSTAINABLE

Filling line - Output: 7,000 bph
Still wine: 5,800 lph Sparkling wine: 3,500 lph
Space requirements (LxW): 64 x 19 meters

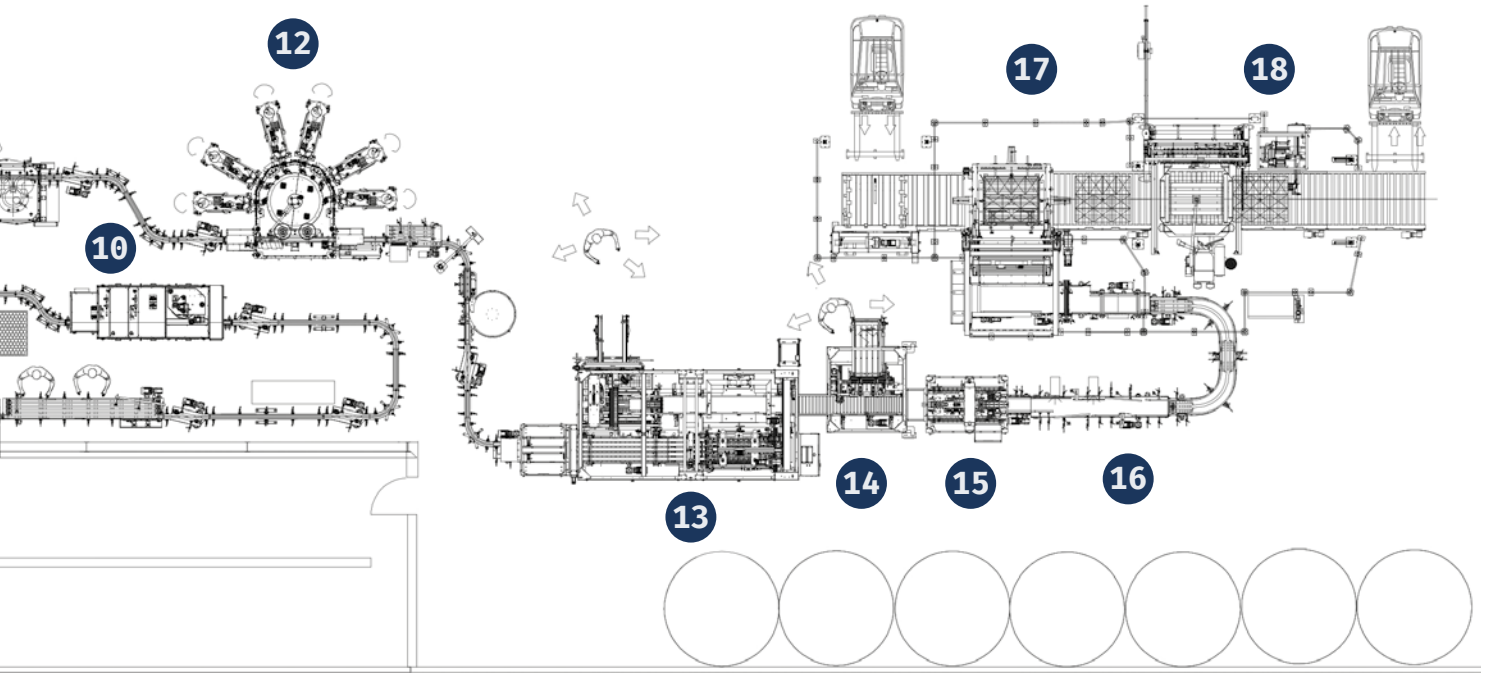

11. ROBINO & GALANDRINO POKER F2/6 Caps distributor, caps folder, caps shrinker and caps spinner, with positioning devices
12. GAI 7900B-12E Adhesive labeler with quality control camera
13. MAS PACK JOLLYPACK 25-3-HM Carton erector, bottle packer
14. MAS PACK EXACTA 23-X-1-HM Partition inserter
15. MAS PACK SEAL 22-12 Carton closer
16. MAS PACK Conveyors for carton labeler
17. MAS PACK JOLLYPAL 22-9 Palletizer
18. Pallet Stretch Wrapper

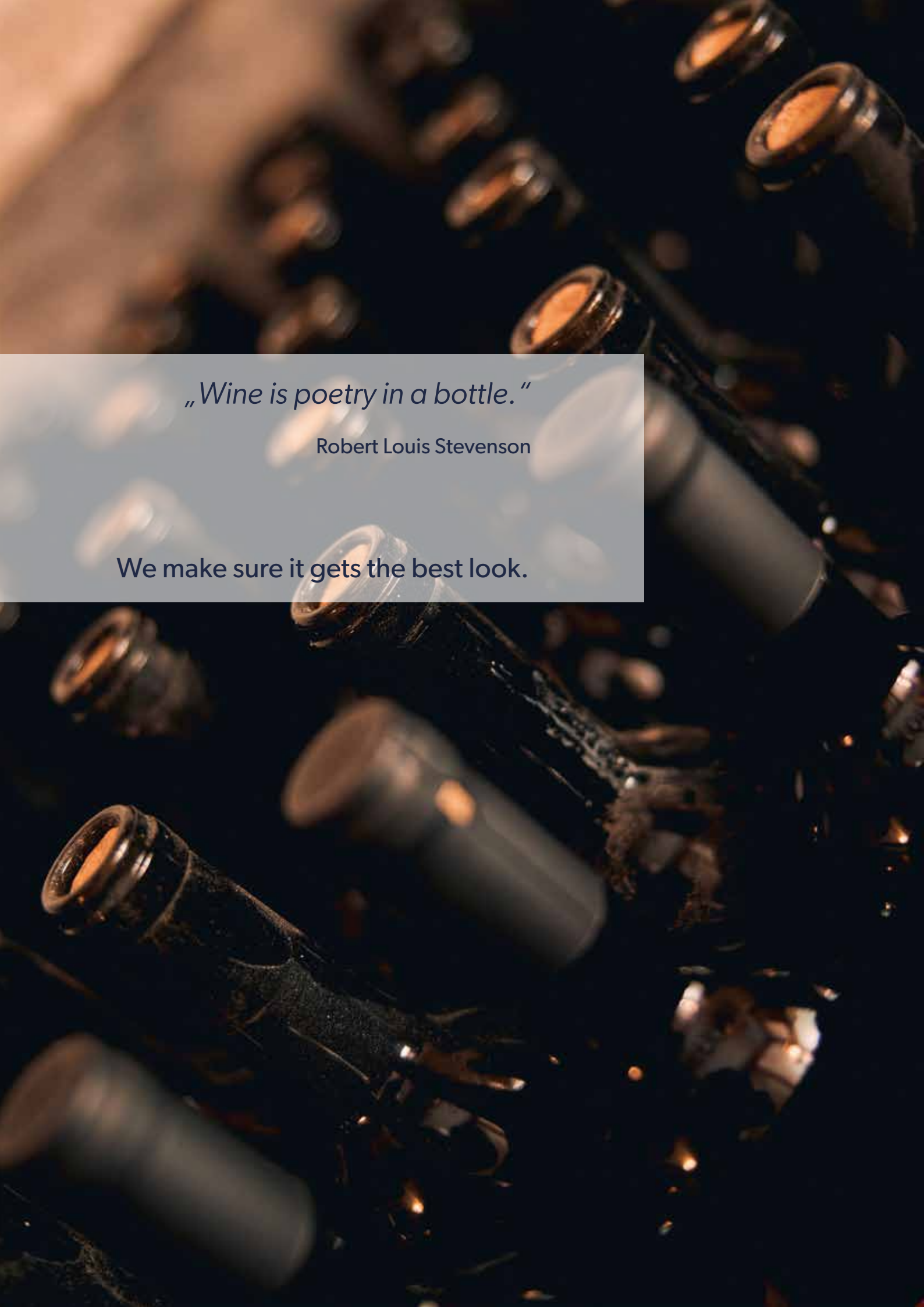

„Wine is poetry in a bottle.“

Robert Louis Stevenson

We make sure it gets the best look.

RINSING - FILLING CLOSING

COST-EFFECTIVE AND PRODUCT FRIENDLY

Since 1946, GAI has been developing and producing bottling lines for a wide beverage range, including wine, sparkling wine, semi-sparkling wine, beer, spirits, vinegar, oil, water, juice and beer in bottles or cans.
The company is headquartered in Ceresole d'Alba, Italy. GAI is currently one of the world's most prominent producers of filling and labeling technology for lines with a capacity of up to 21,000 bottles per hour. The filling systems with gravity, overflow or high-performance pressure fillers are characterized by their perfect reductive filling technology.
These machines are available as standalone units or in combination with rinsers and cappers as compact monoblocs.
All systems with an output of more than 2,400 bottles per hour are CIP-capable. In addition, GAI offers electro-pneumatic volumetric fillers for beverages in cans, with lid sealers and capacities of 1,000 to 21,000 cans per hour.

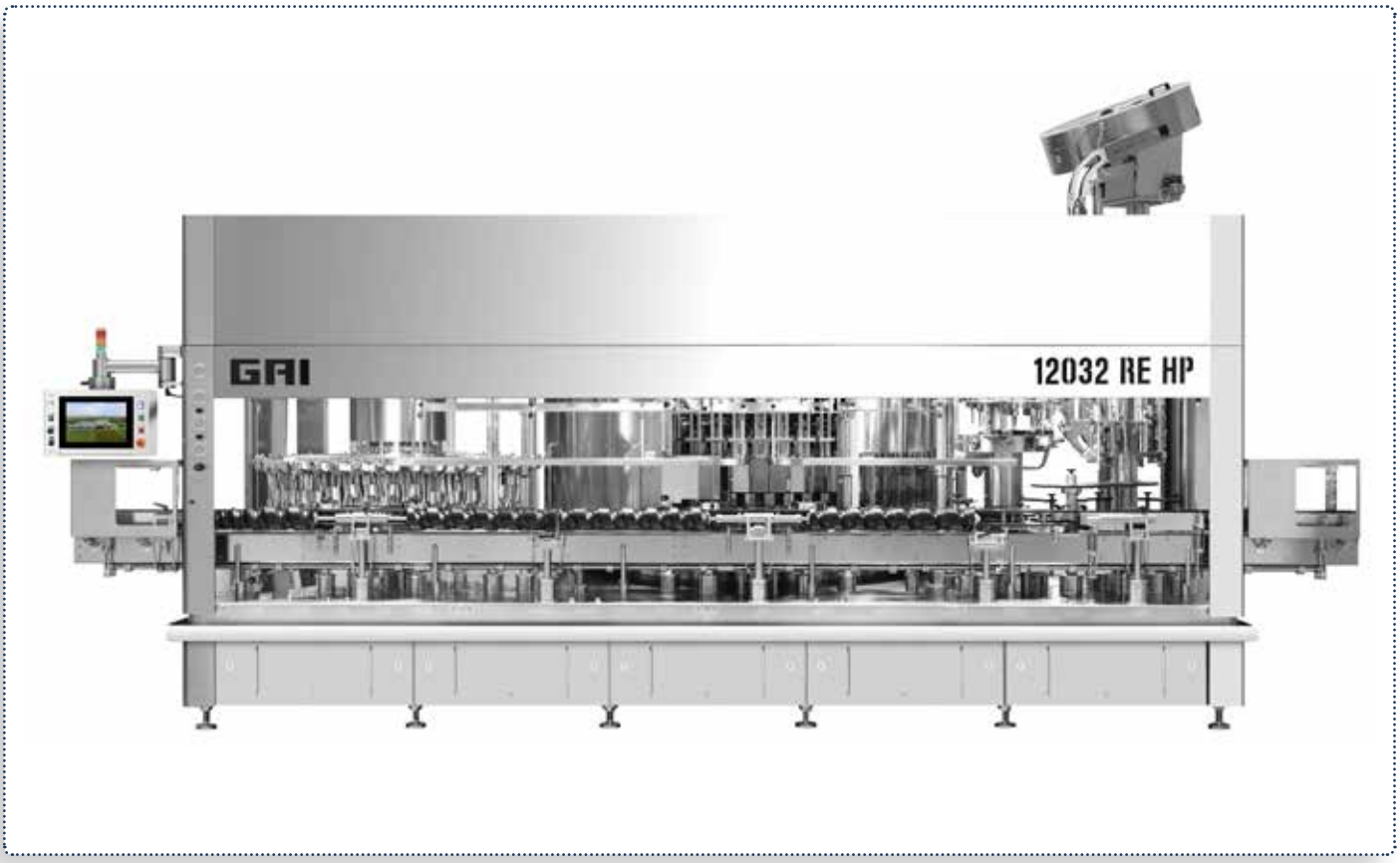

RINSING - FILLING CLOSING

CLEMENS PARTNER GAI

SERIES Y

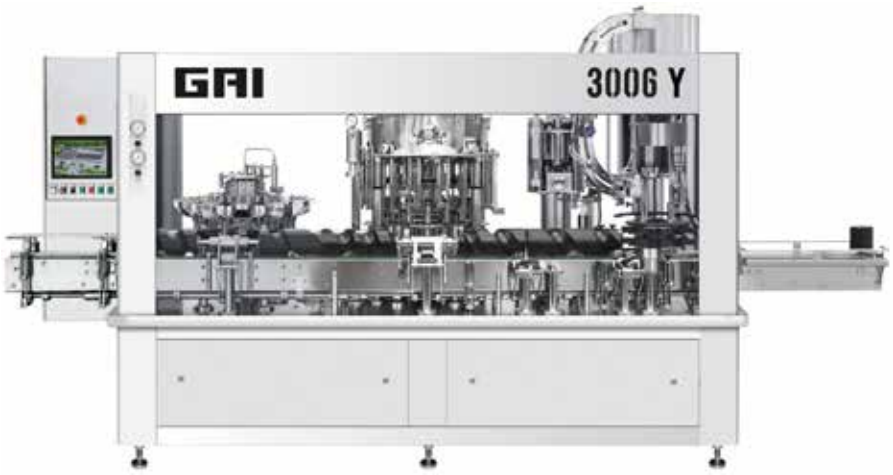

Monoblocks with filler and corker, optionally with mechanical rinser, deaerator and cappers for further types of closures. Gravity filler with light vakuum. Optionally with pressure or overflow. CIP-compatible.

Speed:
1,200 - 3,000 bph
Output:
750 - 3,000 lph

SERIES RE HP



Monoblocks with rinser, filler and corker, for still and sparkling wine. Electropneumatic 2-phases rinser. Electromagnetic filler. Multiple heads cappers for different types of closures.

Speed:
1,000 - 21,000 bph
Output:
Sparkling wine: 1,800 - 15,000 lph
Sekt: 1.100 - 9,000 lph

CLEMENS
BEVERAGE TECHNOLOGY

SERIES MLE CAN

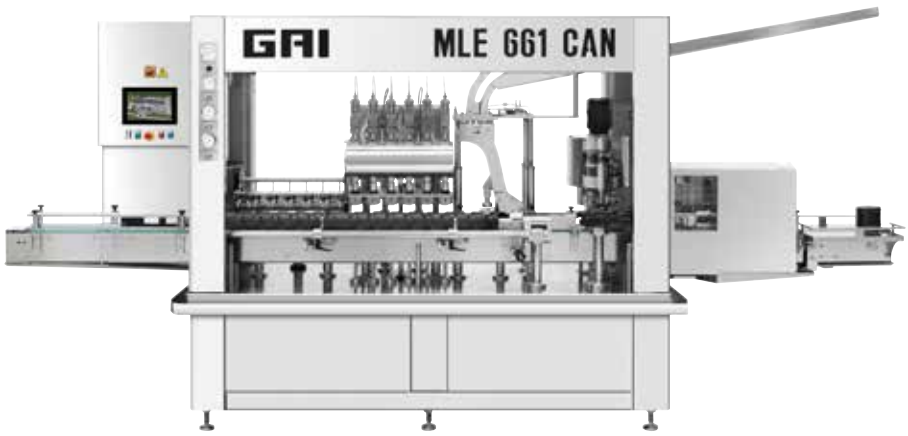

Monoblocks for the filling of cans.
Linear electropneumatic 2-phases rinser. Linear electropneumatic high-capacity pressure filler.
Lid distributor and seamer. Scale for filling control.

Speed:
1,200 - 2,000 cph
Output:
450 - 850 lph

SERIES RE CAN



Monoblocks for the filling of cans.
Rotary electropneumatic and volumetric high-capacity pressure filler.
Rotary lid seamer.
Lid feeding via a manually loaded vibrating conveyor belt.

Speed:
2,000 - 21,000 cph.
Output:
2,600 - 5,300 lph.



„The very best of the best.“

Robert Bosch

Every bottle counts.

RINSING - FILLING CLOSING

MICROFILTRATION AND CIP-SYSTEMS

Automated plant and complex software system for the microfiltration of beverages and for the cleaning and sterilisation of the filter and the filling plant. In this context, the saving of energy, water and many raw materials, which are usually contaminated and disposed of during the production process, is of significant importance. The systems are designed in such a way that they extend the service life of consumables to the full. Functionality, sustainability, expertise and safety are the guiding principles on which the systems are based.
Just like your product, the applications are full of life and continue to evolve in line with customers' needs. Based on this premise, we offer bespoke solutions tailored to the needs of your business.

CIP-Plant
Microfiltration single + double skid
Heat exchanger
Dosing device





„Precision and perfection are not a luxury.“

Niklaus Wirth

We deliver both.

BOTTLE CLEANING AND LABELING

NEATLY SOLVED

High quality finishing of a bottle begins before the labeling. Effective cleaning and drying are essential for clean, long-lasting and safe label adhesion.
CLEMENS Beverage Technology offers automated solutions for the cleaning and drying of filled bottles to prepare them for further processing.
A wide range of labeling systems is available for cylindrical, square and special-shaped bottles.
Depending on the model, front, back, neck and other labels can be applied and positioned with precision. Flexible adjustment settings and automated stations enable the processing of different bottle formats.
This ensures that cleaning, drying and labeling form a perfectly coordinated sequence of process steps, resulting in a precise and impressive appearance for every bottle.

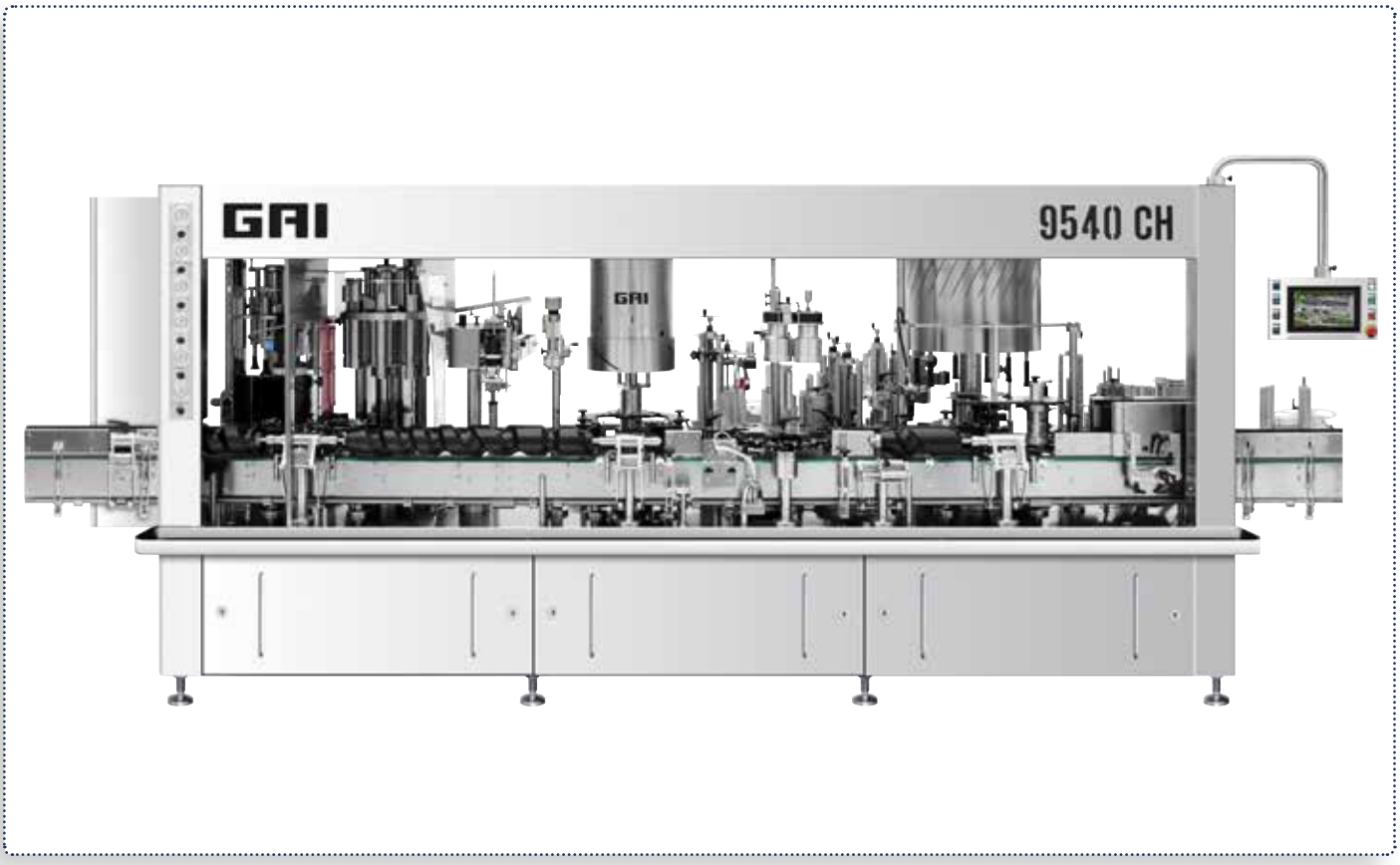

BOTTLE CLEANING AND LABELING

CLEMENS PARTNER GAI

SERIES 5000



Bottle washer and dryer.
Rotary washing station with central brush.
Rotary drying station with air nozzles.

Speed:
400 - 10,000 bph

7 models to select

SERIES 6000



Labeling machine with 2 labeling stations. Optional: up to 2 further labeling stations, caps distributor, caps sleeker, caps shrinker.
With either linear (1-head) or rotary (2 to 6-heads) caps processing.

Speed:
800- 3,000 bph.

10 models to select

CLEMENS
BEVERAGE TECHNOLOGY

SERIES 6000 CH



Labeling machine to dress up champagne bottles.
Champagne caps distributor. Pneumatic Champagne caps pre-former and folder. Caps positioning according to spot.

Speed:
800- 2,500 bph

2 models to select

SERIES 7000



Rotary labeling machines with mechanic or electronic control, with 2 labeling stations.
Optional: Positioning device, label control.
For up to 6 labeling stations..

Speed::
1,000 - 11,250 bph

12 models to selectl

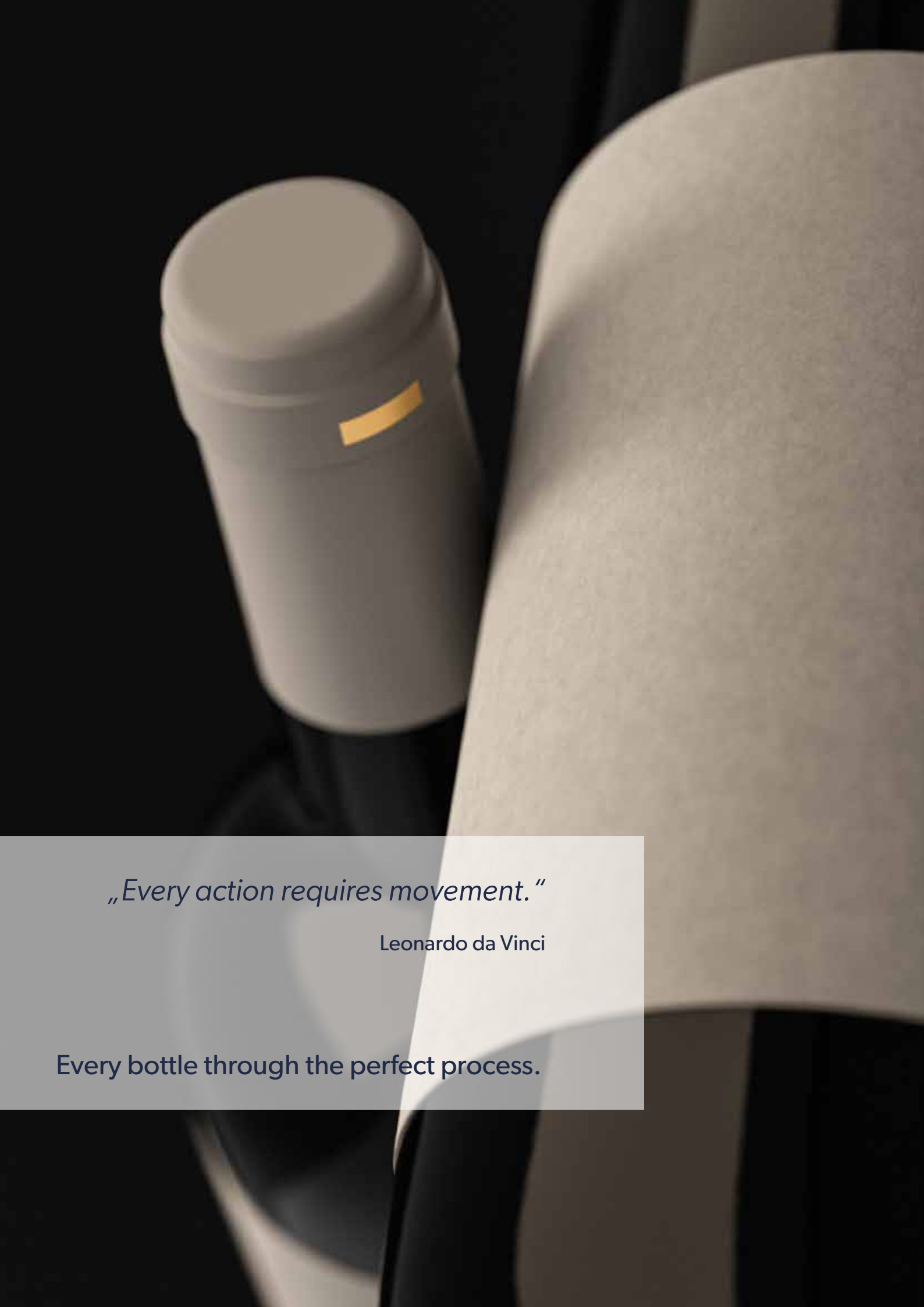

„Every action requires movement.“

Leonardo da Vinci

Every bottle through the perfect process.

LABELING CAPSULING

THE PERFECT PRESENTATION

ENOS have five decades of experience in the field of labeling and capsuling technology. They offer a broad range of fully automatic linear labeling machines for self-adhesive labels, with output speeds from 600 bph to 3,000 bph. The machines provide solutions for highly customized labeling variants on a wide assortment of bottles and container shapes.
All capsuling and labeling machines are designed with a clear, user-friendly interface for intuitive operation. The use of cutting-edge drive technology ensures precise and reliable performance. Our long-standing partnership with ENOS has enabled us to provide customers with expert guidance and best-in-class service.



LABELING CAPSULING

CLEMENS PARTNER ENOS

DELTA



Linear labeling machine with 1 labeling station for cylindrical and square standard bottles, suitable also for bulky containers of 5 ltrs. maximum, for mignon bottles and capsuling cylindrical bottles.
3 labeling stations max possible.

Output:
up to 1,800 bph

SPEEDY



Linear labeling machine with 1 labeling station for cylindrical and square standard bottles, suitable also for mignon bottles, special shaped bottles, capsuling of cylindrical and square bottles.
4 labeling stations max possible.

Output:
up to 3,000 bph

CLEMENS
BEVERAGE TECHNOLOGY

ZETA



Linear labeling machine with PLC and 1 labeling station for cylindrical and square standard bottles, suitable also for mignon bottles, special shaped bottles, capsuling of cylindrical and square bottles. Optional with top guide to keep special bottles save in line.
6 labeling stations max possible.

Output:
up to 2,000 bph

C4000



Linear labeling machine for square bottles with PLC and 1 labeling station. Optional with 1 station for back lable on square bottles.
2 labeling stations max possible

Output:
up to 4,000 bph.



„And it should be nicely sparkling."

Johann Wolfgang von Goethe

Precision for a good drop.

SPARKLING WINE PRODUCTION

MÉTHODE TRADITIONNELLE

PRECISION MEETS TRADITION

The TDD company is headquartered in the French champagne region, situated in the central area near Epernay. For over 30 years, the family business has been manufacturing special machines for the disgorging and dosing of champagne, corking and wiring, as well as liqueur blenders and transvasers for traditional champagne production using the Champenoise method. The company's products are renowned for their quality and longevity. TDD offers a full range of machines to suit a variety of production needs, from semi-automatic models for smaller producers to fully automatic options for champagne houses and large-scale sparkling wine producers, as well as machines for cooperatives.

The product line is complemented by CHAYOUX bottle-neck freezing baths with capacities of up to 2,100 bottles per hour, as well as machines for the automatic wire-capping, washing, and capping of sparkling wine and wine bottles manufactured by ROBINO & GALANDRINO of Canelli, Italy.



SPARKLING WINE PRODUCTION

MÉTHODE TRADITIONNELLE

EDDA 5



Automatic disgorging and dosing machine for champagne bottles, with disgorging arm and thumb, control of bidule and crown cap ejection. Sparkling wine extraction. Liqueur dosing. Top-up valves.

Output:
500 – 2,500 bph
6 models to select

BM 1500



Automatic champagne corker and wire capper, with wire cap magazine.

Output:
up to 1,800 bph.
3 models to select

CLEMENS
BEVERAGE TECHNOLOGY

CLEMENS PARTNER TDD

ML 1200



Automatic liquor blending machine for different bottle sizes, with bottle cage to turn the champagne bottles upside down. As they rotate, the bottles are held in place by a clamping device.

Output:
up to 2,500 bph
2 models to select

BC 218



Bottle-neck freezing baths for manual loading; coolant: 10’ glycol / 8’ brine required.
Various models for processing between 12 and 265 bottles per cycle.

Output:
75 – 2,100 bph
9 models to select

SPARKLING WINE PRODUCTION

MÉTHODE TRADITIONNELLE

MINIBLOCK



Caps distributor for champagne, beer, wine and spirit bottles, with champagne caps pre-former and folder, caps shrinker or caps sleeker. Optional with optical positioning of the caps.

Output:
- **Champagne caps up to 2,000 bph**
- **Shrink caps up to 2,500 bph.**
- **Sleeking caps up to 1,200 bph**

FENIX



Monoblock with caps distributor for champagne, beer, wine and spirit bottles, combined with champagne caps pre-former and folder, caps shrinker or caps sleeker, with bottle neck centering device and elliptically rotating capsule cup.

Output:
- **Champagne caps up to 3,000 bph**
- **Shrink caps up to 5,000 bph**
- **Sleeking caps up to 2,500 bph**

CLEMENS
BEVERAGE TECHNOLOGY

CLEMENS PARTNER ROBINO & GALANDRINO

RECORD



Wire-hooder with distributor for 4-wire hoods and wiring head for champagne and beer bottles. Available also in combination with an integrated corker. Optionally with wire-loop positioning device.

Output:
3,000 - 24,000 bph
3 models to select

OPTIMA



Washing and drying machine for filled, cylindrical bottles. Water jets and brushes clean the body and base of the bottles.Turbines generate preheated compressed air and dry the bottles. The drying tunnel is available separately on request

Output:
Bis 15,000 bph.
5 models to selectl



„No challenge is too great for an engineer.“

Heinrich Seidel

Move. Organise. Pack Safely.

DEPALLETIZING PACKING PALLETIZING

SAFELY PACKED

The renowned Italian company MAS PACK is a dynamic partner dedicated to the development and manufacture of packing machines and systems.

- Depalletizers and unpackers
- Bottle conveyors
- Carton Erectors
- Packers for standing and for lying bottles
- Inserters
- Carton closers
- Carton conveyors
- Palletizers

MAS PACK offers both line and modular solutions. They utilize robot technology to create particularly compact systems.
By working with this partner, we can respond specifically to customer requirements



DEPALLETIZING
PACKING
PALLETIZING

CLEMENS PARTNER MAS PACK

TATO



Depalletizers. Various models with either grippers, pneumatic hose system or sliding frame to take the bottles off the paletts or boxes and guide them to the filling line.

Output:
- **Gripper technique up to 12,000 bph**
- **Sliding technique up to 30,000 bph.**

JOLLYPACK



Packing machine with carton erector, bottle commissioning, packer and carton closing unit either with adhesive tape or with hot melt. Suitable to pack cartons with 6, 12 or 24 bottles.

Output:
- **Monoblocks up to 6,000 bph**
- **Modulare Systems up to 18,000 bph.**

CLEMENS
BEVERAGE TECHNOLOGY

COBOPAL



Collaborative robot with a vacuum gripper head for arranging and stacking cardboard boxes or crates layer by layer onto transport pallets.
Palletizing programmes are available in various configurations or freely programmable via touchscreen.

Output:
- **Without security fence up to 3,000 bph**
- **With security fence up to 4,000 bph**

CONVEYOR SYSTEMS & LINE MANAGEMENT

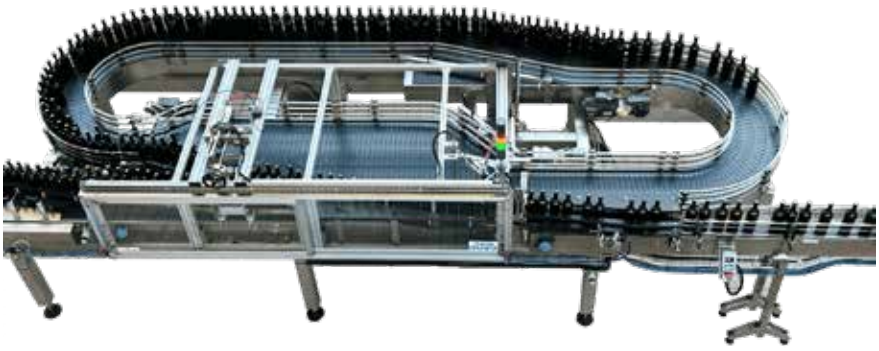

Omega-conveyors
Bottle conveyors
Cartons conveyors
Pallet conveyors
Control of the entire production line

Output:
up to 21,000 bph.



„Recognition must come before application.“

Max Planck

The perfect home for your wine

TANKS

CUSTOMIZED TO YOUR NEEDS

CLEMENS PARTNER LETINA

LETINA – is an internationally established manufacturer of stainless steel tanks.
Working with this partner, we can equip your cellar according to your wishes and requirements with standard tanks or bespoke storage, fermentation or blending tanks:

State-of-the-art tanks, round, cubic and made to measure for:
- Wine
- Sparkling wine
- Beer
- spirits/liqueurs
- water
- oil/vinegar
- and many other products

The advantages of our tanks: extremely sturdy manhole; controlled fermentation via heat exchanger plate or U-shaped double jacket extending over the entire jacket height (optional); ideal for cooling and heating; cooling begins as soon as the tank is filled.

Our product range includes
- Red wine mash tanks as
  - horizontal stirring tanks
  - vertical pneumatic mash immersers
  - vertical mash flooders
- Fermentation tanks, round and rectangular
- Always-full tanks
- Blending tanks
- Transport tanks
- Pressure tanks
- Beer tanks
- Walkways





„The value of an invention depends on its practical application.“

Werner von Siemens

We’re here whenever you need us.

INSTALLATION START UP TRAINING

THE BENEFITS OF OUR SERVICE

Whether you have technical queries or new requirements, our service team is on hand to assist you with the highest level of expertise in machinery and beverage technology. With our fully equipped service vans, we offer you the option of having installation, repair and maintenance work carried out on site as quickly as possible. Our efficiency guarantees you high machine uptime. Spare parts available from stock that are ordered before 12 noon are dispatched on the same day. More than 5,000 item codes are available immediately.

We provide you with:
- Meticulous installation
- Comprehensive training
- Rapid remote support
- Prompt spare parts service
- Qualified maintenance
- Efficient upgrade
- Optimal retrofitting.

DELIVERY



INSTALLATION



START UP



TRAINING



SERVICE, CONSULTING REPAIR PARTS

REMOTE-SUPPORT



SPARE PARTS



OUR STRENGTHS

FOR YOUR BENEFIT

- Dynamic, customized design
- Targeted and creative planning
- In-depth technical consultancy based on decades of experience
- On-site installation and training by our own service teams
- Maintenance and efficient service:
  - provided by qualified CLEMENS technical teams
  - supported by an extensive stock of spare parts in Wittlich
- Remote service





STAY INFORMED

HOMEPAGE

FACEBOOK

INSTAGRAM





a mosaic of possibilities

WWW.CLEMENS-GT.COM

+49 6571 / 929 136 | info@clemens-gt.com

10-2026

Clemens Getränketechnik GmbH & Co. KG - Justus-von-Liebig-Str. 1a - D - 54516 Wittlich